REVISIONS			
REV	DESCRIPTION	DATE	APPROVED

[1] 275 CF Flange

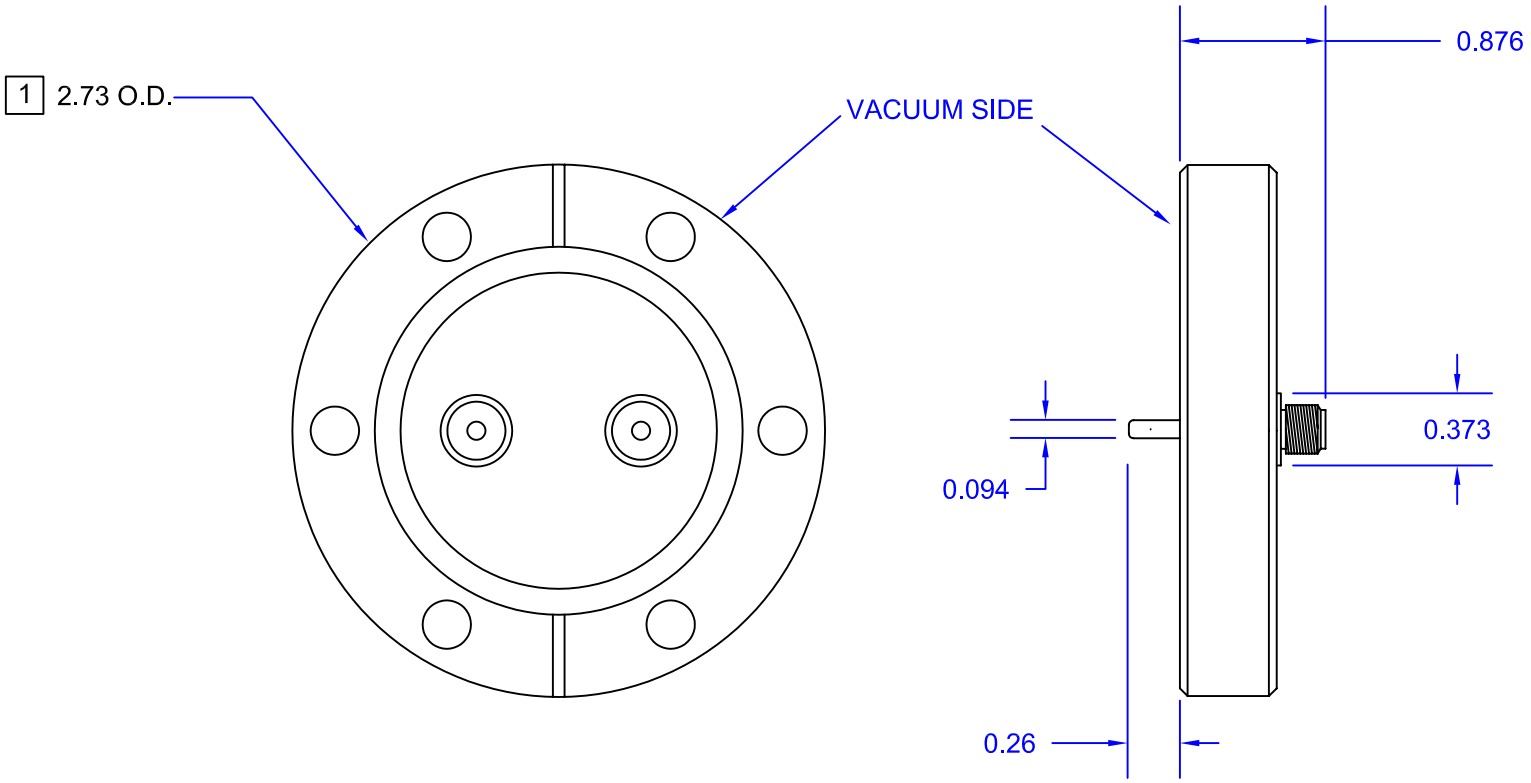

Accu-Glass Products Inc.
25047 Anza Drive
Valencia, CA 91355
TEL 818-365-4215
FAX 818-365-7074
accuglassproducts.com

Notes :

* UNCONTROLLED WEB COPY *

Material

Tolerances unless otherwise specified
Decimal .xx= +/- .005 .xxx= +/-.002
Angular +/- 1°

Title: SMA-GS2-275

Drawn By	M.Wilson	DWG NO. 110737	Date 6-10-08
Approved		PDFE	Cage Code : 4HCQ8