Rev	Description	Date

Notes

1. 3/4 Inch Zero-Length Viewport... Corning 7056 Borosilicate Glass
2. View diameter is distortion-free central region of glass
3. Leak tested to 5x10E-10 Standard cc/sec He
4. Protect flange seal surfaces

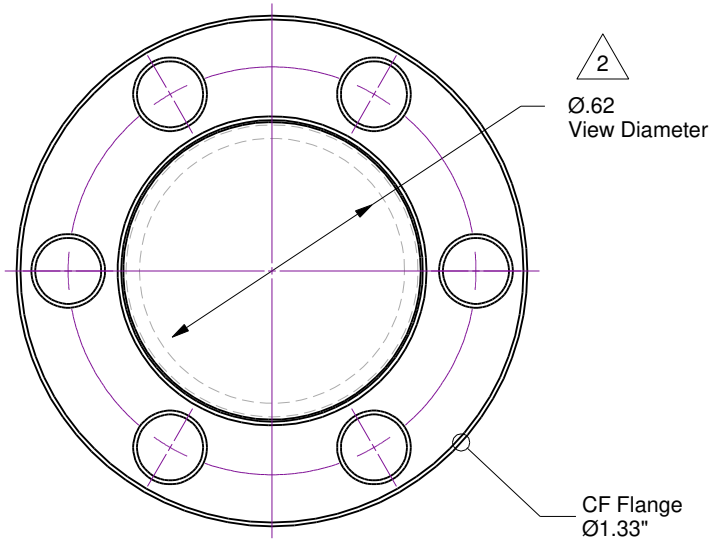

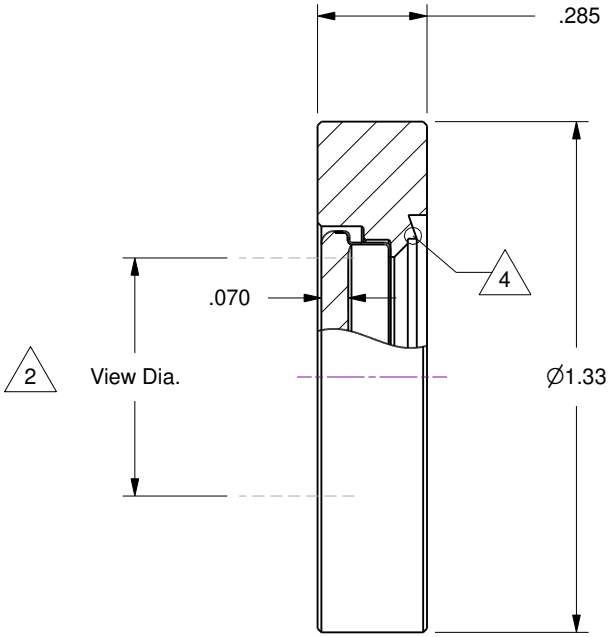

Accu-Glass Products Inc.
25047 Anza Drive
Valencia, CA 91355
T 818-365-4215
F 818-365-7074
www.accuglassproducts.com

UNCONTROLLED WEB DRAWING

Proprietary and Confidential
The information contained in this drawing is the sole property of Accu-Glass, Products Inc. Any reproduction, in part or as whole, without the written permission of Accu-Glass Products, Inc., is strictly prohibited.

Material	Title		
304SS / 7056-Glass / Kovar	**VPG-0.6-133**		
Tolerances, unless otherwise specified	Drawn by L.Bitz	No. **112401**	Rev.
.X ± . 030 / .XX ± .010 / .XXX ± .005 / Angles ± 0.5° / Finish 63Ra	Date 2022/02/09		
	Approved		Sheet